

PITCH

Casual all-around hat made of recycled polyester and elastane. It features an elastic sweatband and a full closure for a comfortable fit.

Technical accessories

Composition: Main Fabric: 97% Recycled Polyester Twill 3% Elastane - 200 gsm

Visor: Mid/ 5 rows/ Mid Visor

Eyelets: 6 Sewn eyelets on crown

Size: S/m-l/xl 56cm - 58,5 cm

Custom code: 6505.00.30

Panels: 6 Panels

Visor: Mid/ 5 rows/ Retraze Recycled Visor

Others: Stretchable

Packing: 24 x 144

Made in: China

Weight: 0.09

ELASTIC SWEATBAND
Stretch construction that provides a comfortable fit.

STRETCHABLE FABRIC
It is a mix of fabric, in which the main material is combined with a few percentage of elastane, for an absolute confortable and perfect fitting.

MID VISOR
Caps with a new concept of visor, not curved..nor flat.. in perfect American Style, for an elevated look and feel.

FULLY CLOSED
Fully closed at back, in 2 sizes, to satisfy any fit.

RECYCLED BUCKRAM
Recycled lamination on front panels to maintain the shape with a slightly higher crown.

RECYCLED POLYESTER
Fiber made from polymers obtained by recycling plastic bottles.

Washing instruction

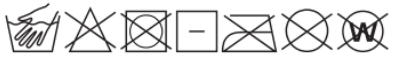

Hand wash/ do not bleach/ do not dry by tumble dryers/ dry flat/ do not iron/ do not dry clean/ do not professional wet clean

Technical Size (cm)

2. 7.0/7.0
3. 17.0/17.5
4. 18.0/19.5
5. 9.0/9.5
6. 33.0/34.5

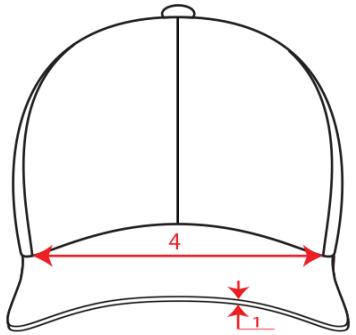

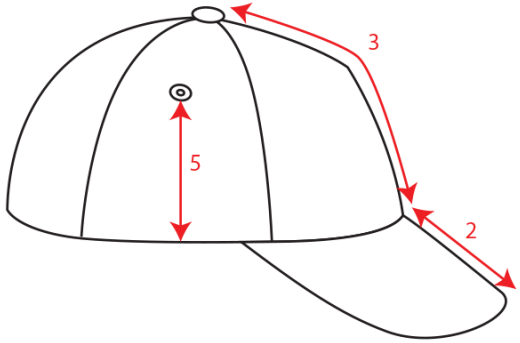

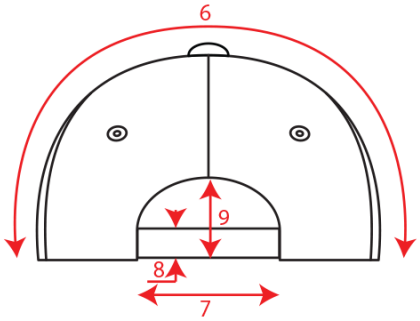

Color variants (TPX / Pantone)

BLACK-LXL



SWEATBAND: 19-4006 / BLACK-6-C
TAPING: 19-4006 / BLACK-6-C
HAT: 19-4006 / BLACK-6-C

NAVY-LXL



SWEATBAND: 19-4006 / BLACK-6-C
TAPING: 19-4009 / 533-C
HAT: 19-3920 / 533-C

DARK-GREY-LXL



SWEATBAND: 19-4006 / BLACK-6-C
TAPING: 19-3910 / COOL-GREY-11-C
HAT: 19-3910 / COOL-GREY-11-C

BLACK-SM



SWEATBAND: 19-4006 / BLACK-6-C
TAPING: 19-4006 / BLACK-6-C
HAT: 19-4006 / BLACK-6-C

NAVY-SM



SWEATBAND: 19-4006 / BLACK-6-C
TAPING: 19-4009 / 533-C
HAT: 19-3920 / 533-C

DARK-GREY-SM



SWEATBAND: 19-4006 / BLACK-6-C
TAPING: 19-3910 / COOL-GREY-11-C
HAT: 19-3910 / COOL-GREY-11-C